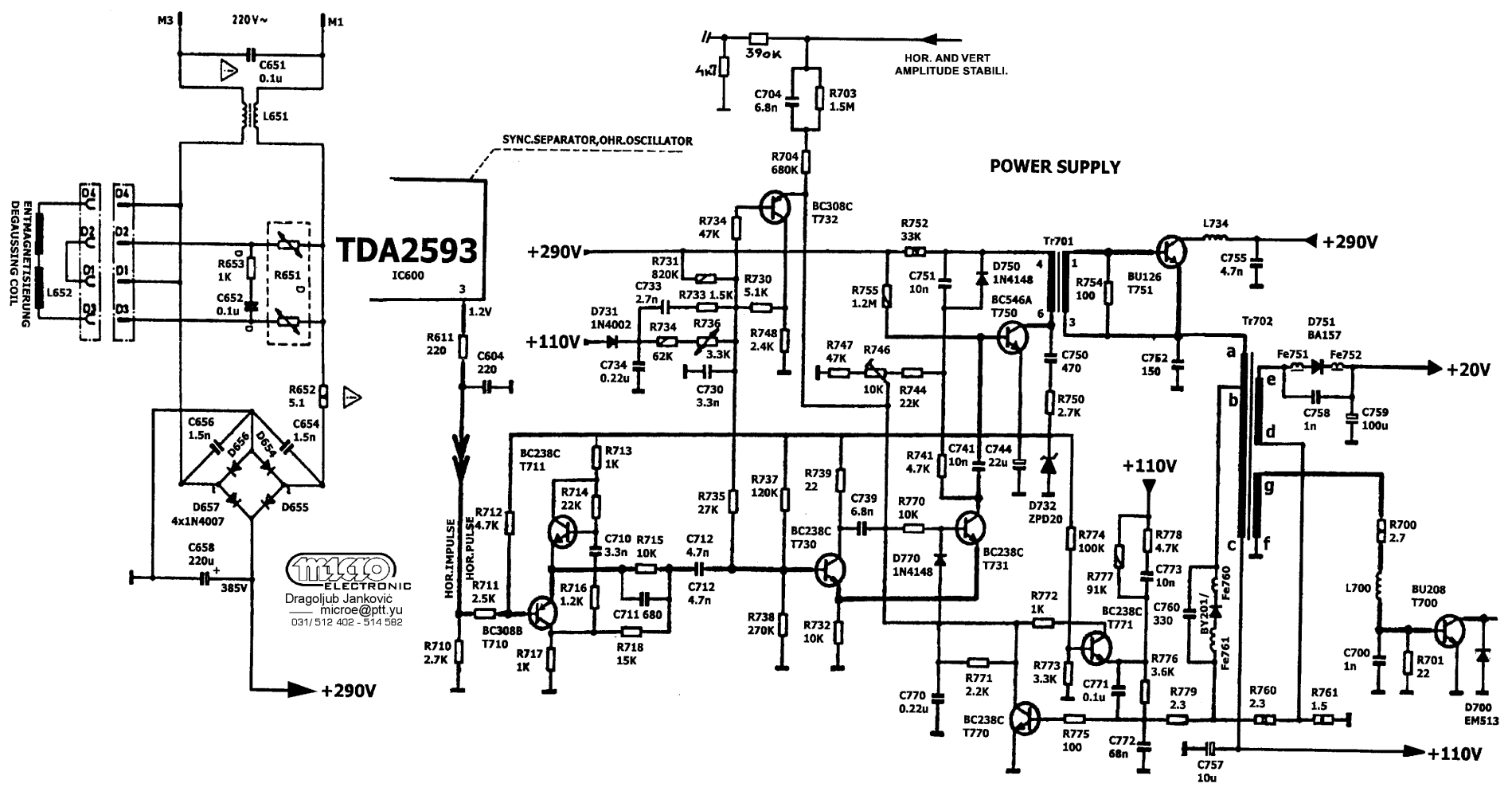

micro ELECTRONIC
Dragoljub Janković
microe@ptt.yu
031/512 402 - 514 582